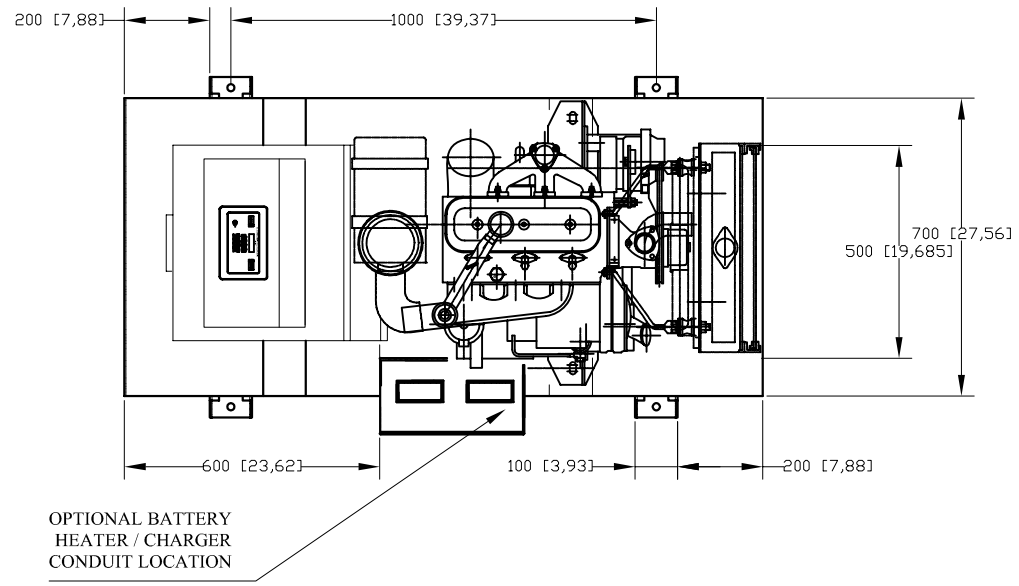


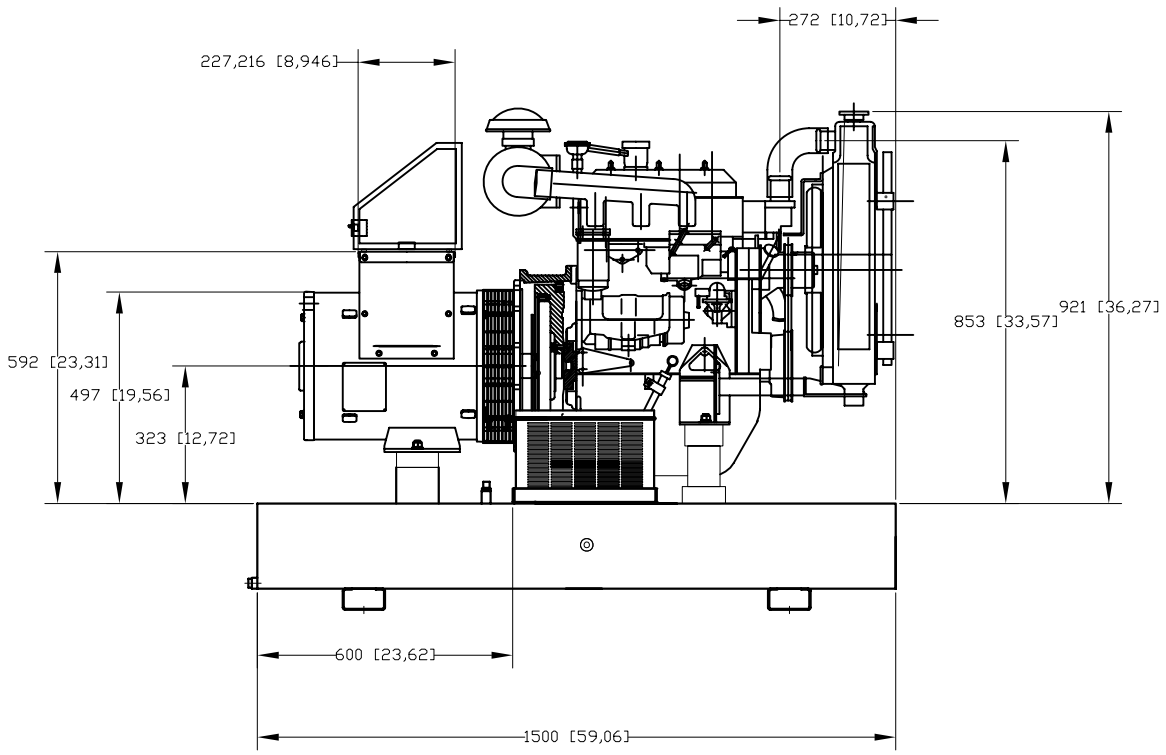


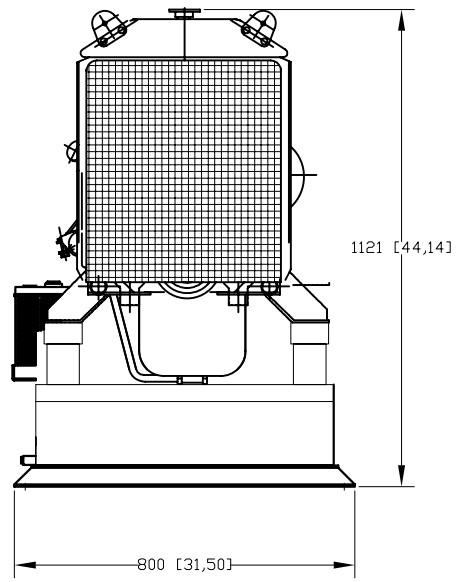


## NOTES

1) INSTALLATION NOTE

IF SUBBASE FUEL TANK AND/OR SOUND HOUSING IS USED, REFER TO SUBBASE FUEL TANK ADV TO DETERMINE MOUNTING LOCATIONS

2)WHEN SUBBASE TANK IS USED, CONDUIT MUST BE LOCATED OUTSIDE OF TANK AREA OR IN STUB-UP AREA FOR SUBBASE TANK, REFER TO SUBBASE ADV.

3) IF AN ENCLOSURE IS USED THE FUEL LINE MUST BE STUBBED UP FROM DIRECTLY UNDER THE UNIT OR BROUGHT IN FROM THE OF THE SKID REFER TO ENCLOSURE ADV.

IMPROVED MOTOR STARTING (IMS) RECONNECTABLE 600 V & 1 PHASE ALTERNATOR MARATHON 8031i06.05 IVECO

| APLICATE STANDARD | |
|---|---|
| NORM | REVIEW |
| | |
| | |
| | |
| | |
| | |
| | |

NOTE: DIMENSIONS IN [] ARE INCH

| DESCRIPTION | REVIEW. | NUMBER OF CHANGE | DATE | REVIEW |
|---|---|---|---|---|
| LIST OF REVISIONS | | | | |

| NA | NA | NA | NA | NA |
|---|---|---|---|---|
| MATERIAL | PART NUMBER | WEIGHT (kg) | FINISH | NOT FINISH |

STANDARD TOLERANCES OF NOT SPECIFY OTHER

| MANUFACTURING NOT TOLERANCE | | MANUFACTURING TOLERANCE | | | ANGULAR | |
|---|---|---|---|---|---|---|
| RANGE | TOLERANCES | DECIMAL | LINEAR | DIAMETER | No. DIM | DIM |
| 0 mm - 200 mm | +- 0.1 mm | 0 | ± 0.25 | | 90° ±2 | ± 1 |
| 20mm - 5 m | +- 1 mm | 1 | ± 0.15 | ± 0.05 | CODE CRITICIZE DIMENSION | |
| 5 m-12 m | +- 3 mm | 2 | ± 0.007 | ± 0.05 | | |
| 12m-100m | +- 10 mm | 3 | | | APROVE | |
| | | FRACTION | | | WITH GAUGE | |
| | | RIMADO | | ± 1/64 | | |

THE INFORMATION CONTEINED IN THESE DOCUMENT IS PROPERTY EXCLUSIVE OF MAQUINARIA IGSA THEREFORE, THE TOTAL OR PARTIAL REPRODUCTION WITHOUT NOT CONSENT CANNOT WRITING BE USED OF MAQUINARIA IGSA S.A DE C..

CUSTOMER:

MAQUINARIA IGSA S.A. DE C.V.
OFIC. GENERALES: PASEO DE LA REFORMA No. 2977, COL. CUAJIMALPA, CP 05000, MEX. DF.
PLANTA: CARRETERA ANCHOLULCO-OCOYUCACAC KM-5, LERMA EDO. DE MEXICO, CP. 52740
DEPARTAMENTO DE INGENIERIA TEL: 01-728-2877530 AL 33 Ext: 115 & 117, FAX Ext: 122.

TITLE: **GENERAL ADJUSTMENT GEN SET 30 KW WITH INTEGRATED TANK**

CAPACITY OF 20-30 KW IN EMERGENCY, 3F+4H, 440/220 VCA, 60Hz, STARTING 12VCD, WITH MOTOR IVECO AND GENERATOR MARATHON

| DATE: | DRAWMAN: | REVIEW: | APPROVED: | REV.: |
|---|---|---|---|---|
| 10-05-07 | J.L.G.S. | R.T.R. | H.D.B. | 01 |

ESCALE: WITHOUT DIMENSION: mm | DRAW NUMBER: GSIV00030M | SHEET 1 of 3



COPY CONTROLLED
COPY NOT CONTROLLED
OBSOLET DATE_____

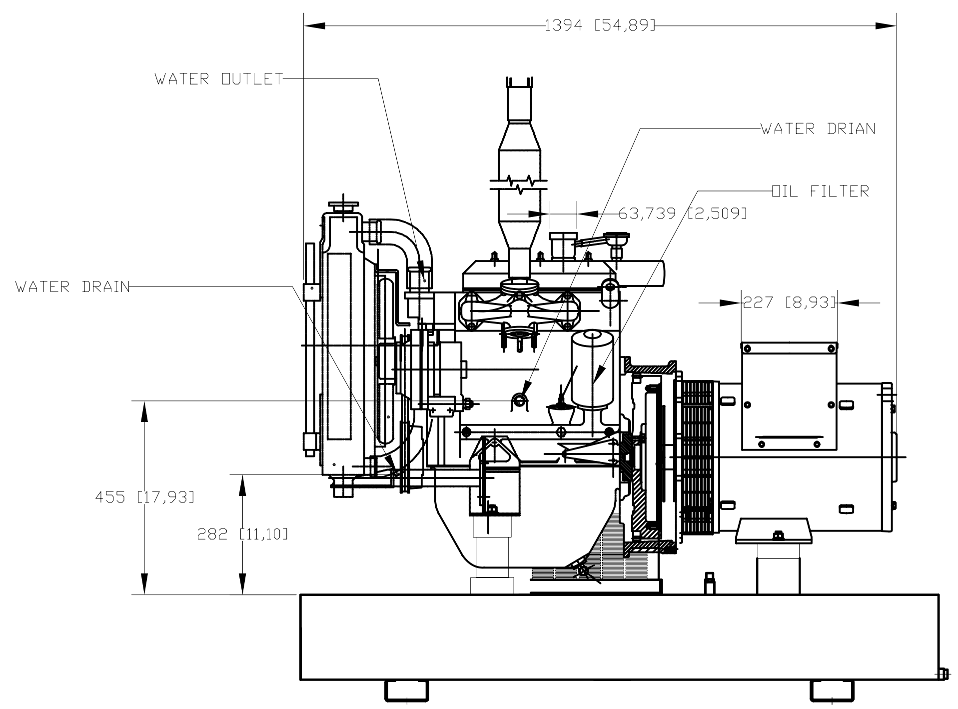


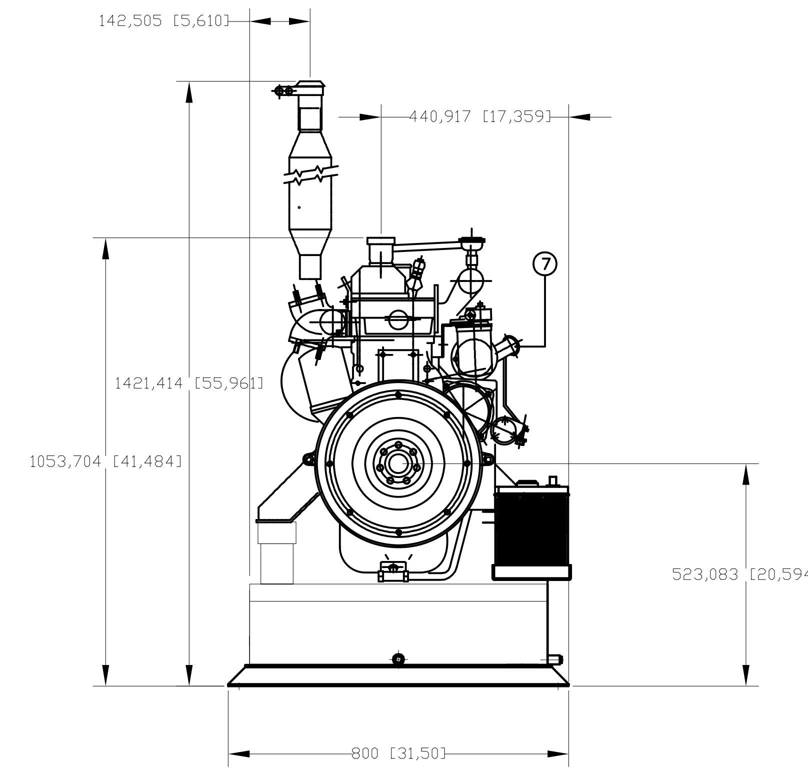


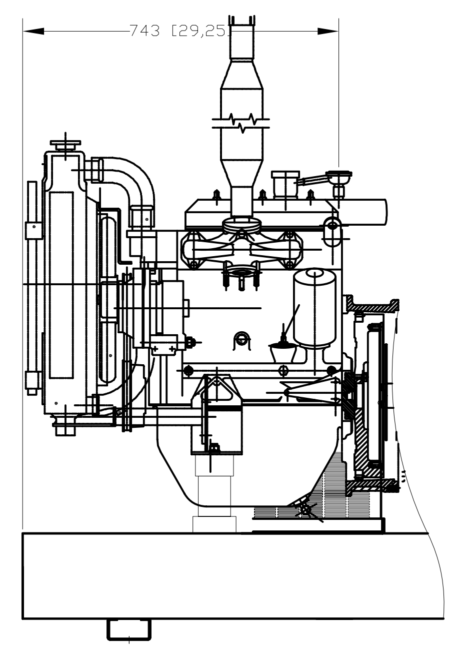


NOTE: DIMENSIONS IN [] ARE INCH

| APLICATE STANDARD | |
|---|---|
| NORM | REVIEW |
| | |

| DESCRIPTION | REVIEW. | NUMBER OF CHANGE | DATE | REVIEW |
|---|---|---|---|---|
| LIST OF REVISIONS | | | | |

| NA | NA | NA | NA | NA |
|---|---|---|---|---|
| MATERIAL | PART NUMBER | WEIGHT (kg) | FINISH | NOT FINISH |

STANDARD TOLERANCES OF NOT SPECIFY OTHER

| MANUFACTURING NOT TOLERANCE | | MANUFACTURING TOLERANCE | | | ANGULAR | |
|---|---|---|---|---|---|---|
| RANGE | TOLERANCES | DECIMAL | LINEAR | DIAMETER | No. DIM | DIM |
| 0 mm - 200 mm | +- 0.1 mm | 0 | ± 0.25 | | 90° ⊄ | + 1 |
| 201mm - 5 m | +- 1 mm | 1 | ± 0.15 | | CODE CRITICIZE DIMENSION | |
| 5 m-12 m | +- 3 mm | 2 | ± 0.007 | ± 0.05 | | |
| 12m-100m | +- 10 mm | 3 | | | APROVE | |
| | | FRACTION RIMADO | | | WITH GAUGE | |

THE INFORMATION CONTEINED IN THESE DOCUMENT IS PROPERTY EXCLUSIVE OF MAQUINARIA IGSA THEREFORE, THE TOTAL OR PARTIAL REPRODUCTION WITHOUT NOT CONSENT CANNOT WRITING BE USED OF MAQUINARIA IGSA S.A DE C..

CUSTOMER:

MAQUINARIA IGSA S.A. DE C.V.

OFIC. GENERALES: PASEO DE LA REFORMA No. 2977, COL. CUAJIMALPA, CP 05000, MEX. D.F.
PLANTA: CARRETERA AMOMOLULCO-OCOYOACAC KM-5, LERMA EDO. DE MEXICO, CP 52740
DEPARTAMENTO DE INGENIERIA: TEL.: 01-728-2877530 AL 33 Ext.: 115 & 117, FAX Ext.: 122.

TITLE: **GENERAL ADJUSTMENT GEN SET 30 KW WITH INTEGRATED TANK**

CAPACITY OF 30 KW IN EMERGENCY, 3F-4H, 440/220 VCA, 60Hz, STARTING 12VCD, WITH MOTOR IVECO AND GENERATOR MARATHON

| DATE: | DRAWMAN: | REVIEW: | APPROVED: | REV.: |
|---|---|---|---|---|
| 10-05-07 | J.L.G.S. | R.T.R. | H.O.B. | 01 |

ESCALE: WITHOUT
DIMENSION: mm
DRAW NUMBER: GSIV00030M
SHEET 2 of 3

FO-GI-01-02 REV.01

☐ COPY CONTROLLED ☐ COPY NOT CONTROLLED ☐ OBSOLET DATE____________

| GENERAL SPECIFICATIONS FOR GEN SET 20-30KW WITH INTEGRATED TANK | | | | | | |
|---|---|---|---|---|---|---|
| ASSEMBLY NUMBER | CAPACITY KW | ENGINE IVECO MODEL | ALTERNATOR MARATHON MODEL | WEIGHT WITHOUT DIESEL | FUEL CONSUMPTION WITH LOAD IN LTS./HR. AND ENGINE POWER: | |
| | | | | kg | al 75% | al 100% |
| GS-IV-30 M | 30 | PRIV-8031I06 | 283 CSL 1507 | 846 | 7.2 | 9.1 |

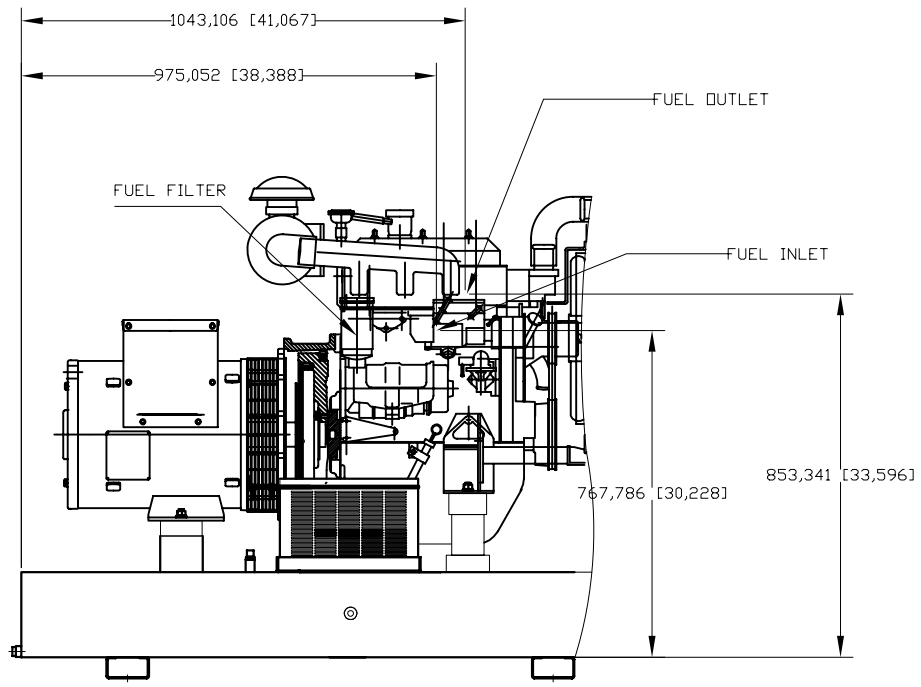


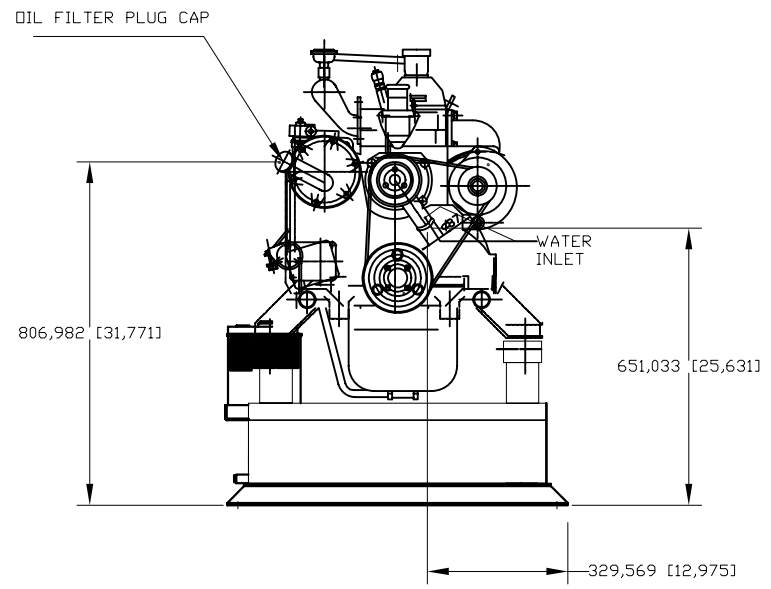


| APLICATE STANDARD | |
|---|---|
| NORM | REVIEW |
| | |
| | |
| | |
| | |
| | |
| | |

NOTE: DIMENSIONS IN [] ARE INCH

| DESCRIPTION | REVIEW. | NUMBER OF CHANGE | DATE | REVIEW |
|---|---|---|---|---|
| LIST OF REVISIONS | | | | |

| NA | NA | NA | NA | NA |
|---|---|---|---|---|
| MATERIAL | PART NUMBER | WEIGHT (kg) | FINISH | NOT FINISH |

STANDARD TOLERANCES OF NOT SOECIFY OTHER

| MANUFACTURING NOT TOLERANCE | | MANUFACTURING TOLERANCE | | | ANGULAR | |
|---|---|---|---|---|---|---|
| RANGE | TOLERANCES | DECIMAL | LINEAR | DIAMETER | No. DIM | DIM |
| 0 mm - 200 mm | +- 0.1 mm | 0 | ± 0.25 | ——— | 90° ±2 | + 1 |
| 201mm - 5 m | +- 1 mm | 1 | ± 0.15 | ± 0.05/0.10 | CODE CRITICIZE DIMENSION | |
| 5 m-12 m | +- 3 mm | 2 | ± 0.007 | ± 0.05 | | |
| 12m-100m | +- 10 mm | 3 | ——— | ——— | | |
| | | FRACTION | ——— | ——— | APROVE | |
| | | RIMADO | ——— | ± 0.05/0.10 | WITH GAUGE | |

THE INFORMATION CONTEINED IN THESE DOCUMENT IS PROPERTY EXCLUSIVE OF MAQUINARIA IGSA THEREFORE, THE TOTAL OR PARTIAL REPRODUCTION WITHOUT NOT CONSENT CANNOT WRITING BE USED OF MAQUINARIA IGSA S.A DE C..

CUSTOMER:

MAQUINARIA IGSA S.A. DE C.V.
OFIC. GENERALES: PASEO DE LA REFORMA No. 2977, COL. CUAJIMALPA, CP 05000, MEX. D.F.
PLANTA: CARRETERA AMONOLULCO-OCOYOACAC KM-5, LERMA EDO. DE MEXICO, CP 52740
DEPARTAMENTO DE INGENIERIA: TEL: 01-728-2877530 AL 33 Ext: 115 & 117, FAX Ext: 122.

TITLE: **GENERAL ADJUSTMENT GEN SET 30 KW WITH INTEGRATED TANK**

CAPACITY OF 20-30 KW IN EMERGENCY, 3F-4H, 440/220 VCA, 60Hz, STARTING 12VCD, WITH MOTOR IVECO AND GENERATOR MARATHON

| DATE: | DRAWMAN: | REVIEW: | APPROVED: | REV.: |
|---|---|---|---|---|
| 10-05-07 | J.L.G.S. | R.T.R. | H.O.B. | 01 |

ESCALE: WITHOUT
DIMENSION: mm
DRAW NUMBER: GSIV00030M
SHEET 3 of 3

FO-GI-01-02 REV.01

COPY CONTROLLED

COPY NOT CONTROLLED

OBSOLET DATE_____